Issue #3 • June 2004

Tree • times

A Publication of Treehouse Software, Inc.

This Issue

"I wanted to pass on my appreciation for the excellent work that Wayne Lashley performed for us this week. The National Business Center is a Treehouse customer with N2O and recently purchased tRelational and DPS.

Wayne was here this week to provide training for us and to help us figure out what we needed to know in order to move towards production. Our shop, like most others, is comprised of several independent organizations.

Wayne was extremely cognizant of this human dynamic and led our discussions in a professional manner, which made our week move smoothly. I was extremely pleased that Wayne's preparation and presentation showed that he had listened during our brief conversations prior to our tRelational and DPS pilot and understood what we wanted to accomplish. He is very knowledgeable about more than just your products, and that enabled him to exceed my expectations for the week.

I want to thank Treehouse for his participation this week. We look forward to expanding our relationship and hope that, in the coming months, the NBC becomes a model implementation for tRelational and DPS."

Martin J. Quinlan
Applications Management and Technology Branch
National Business Center

Treehouse Software, Inc.

"*XMLize*" Your Enterprise

by Joseph Brady and Dan Vimont

Treehouse Software's newest product offering is **DPS X-Link**, a remote-data-access middleware product that provides your enterprise's PC-based (or mainframe-based) applications with real-time access to mainframe ADABAS data and metadata in XML format. The "no-programming-required" installation and configuration of the **DPS X-Link** server and client components allows developers to begin working **today** on their front-end applications instead of coding, configuring, and maintaining complex middleware components.

The focus of **DPS X-Link** is to provide a simple and easy-to-use/install product for the mainframe-ADABAS-to-XML (and soon, XML-to-ADABAS) marketplace.

*Contact Treehouse today for a free 30-day trial of **DPS X-Link**.*

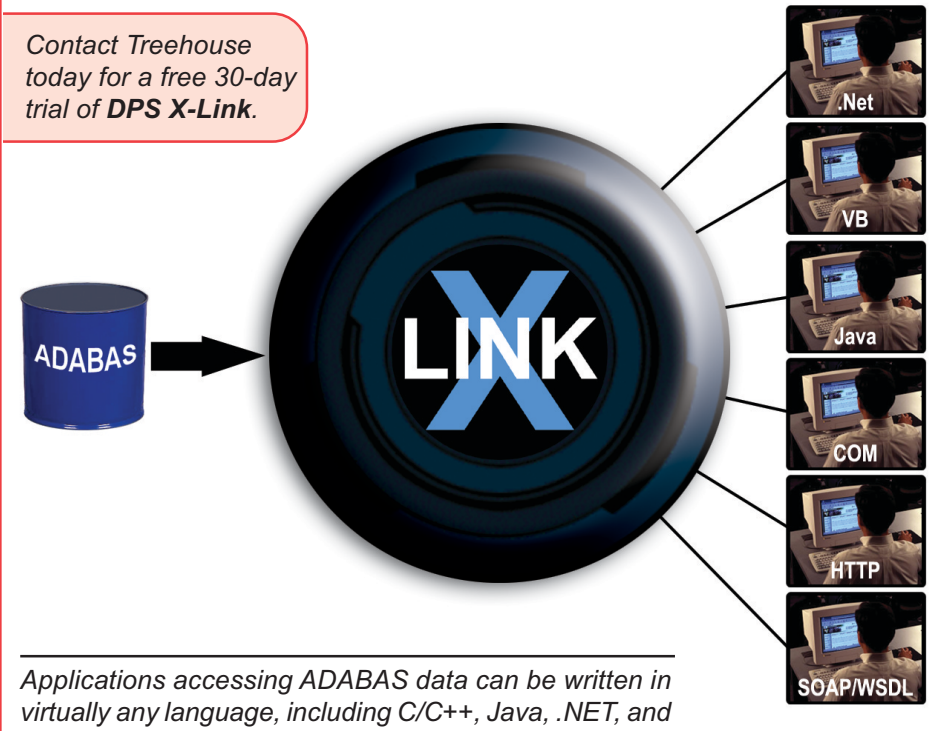

Applications accessing ADABAS data can be written in virtually any language, including C/C++, Java, .NET, and Visual Basic 6, as well as industry standard protocols such as HTTP, SOAP/WSDL, and COM.

Not only is ADABAS data delivered in XML format, but *all* pertinent structural aspects of a site's legacy ADABAS databases (as defined in ADABAS and PREDICT) are transformed and presented to application developers in purely

(continued on page 3)

Tales From the Trails

Over the past few months, TSI representatives have been very busy on various consulting jobs, site visits, and product demonstrations. They have visited sites in Alaska, California, Canada, Colorado, Florida, Hawaii, Germany, Illinois, Israel, Massachusetts, Missouri, The Netherlands, New York, North Carolina, Ohio, Spain, Texas, Utah, Virginia, Washington D.C., and Washington State.

Demo TSI Products On-line

Contact sales@treehouse.com to set up a live, on-line demonstration of any TSI product. All you need is an Internet connection and a current Web browser (Netscape, Internet Explorer, etc.) to see TSI products in action right on your PC screen.

Find out the Latest on TSI Products

To find out about current versions of TSI products, compatibility (operating systems, languages, etc.), and support information for all of our products, view the TSI Product Status Matrix on-line at www.treehouse.com/prodstatus.html.

Tree•times

Editing, Writing, and Design
Joseph Brady

Contributors
Wayne Lashley, Chris Rudolph, Heather Snyder, Greg Such, and Dan Vimont

Production and Distribution
Terri Hammerschmitt

Back issues available upon request. Documentation for all products is available in hard copy or on CD-ROM.

Hard Copy Circulation: 8,000

IT'S ABOUT REAL-TIME !!!

As part of Treehouse's ongoing commitment to bring our customers the most robust ADABAS-to-RDBMS data transfer product on the market, we will be offering **REAL-TIME** capabilities in the fall of 2004. Visit www.treehouse.com regularly for more developments.

Be sure to read the article ***Introducing the ADABAS-to-RDBMS Leader --Again*** by **Wayne Lashley**, on Page 5 of this issue of TREETIMES. You'll find out why dozens of large organizations around the world have chosen the proven Treehouse ADABAS-to-RDBMS product set.

Treehouse Teams with "The Godfather of the Data Warehouse"

by Wayne Lashley

Many ADABAS sites have made TSI's **tRelational/DPS** and **DPSync** a key part of the technology infrastructure to support business intelligence (BI) systems. However, success in BI projects requires more than technology; it requires a proven methodology.

To assist customers in leveraging our products for successful BI initiatives, TSI has allied with **Earl Hadden**, a world-renowned authority in the data warehouse movement. Earl is co-developer of the *Hadden-Kelly Data Warehouse Method*, the most widely used methodology for the development of data warehouses, data marts and BI solutions. Known for his pragmatic, business-driven approach, Earl has worked with over thirty-five organizations in seventeen countries to help significantly improve business performance through the application of advanced management concepts and information technology. He is a member of the Data Warehouse Network Editorial Advisory Board, the Patricia Seybold Group Business Intelligence and Data Warehouse Advisory Panel, and the Digital Consulting Data Warehouse Advisory Board. Earl's worldwide seminars have been sponsored by Digital Consulting Inc., Technology Transfer Institute, IIT, SPL, Ni-Tech, NCR, Digital Equipment Corporation, Oracle Corporation, BBS International, Business Objects, Prism Solutions, Informix, Aonix, Silicon Graphics, Carleton Corporation, Sybase, Software AG, the Data Warehouse Institute, and the Data Warehouse Network.

The Hadden-Kelly Method fosters project success by delivering:

- A solution aligned with business strategy
- An architecture or "blueprint" to ensure integration
- Application of both business and technical expertise
- A solution that is constructed incrementally, with each increment delivering a significant, measurable business benefit
- Fast and focused development

TSI can now provide expert consulting services utilizing the Hadden-Kelly Method to help you achieve your business intelligence goals. Contact TSI today for more information! ●

"XMLize" Your Enterprise *(continued from page 1)*

open-standards formats (i.e., XML Schema), so developers who are building applications that query **DPS X-Link** for ADABAS data need to have little knowledge of the proprietary ADABAS world.

DPS X-Link completely automates the process of converting legacy ADABAS data into XML documents and the corresponding PREDICT/ADABAS metadata into XML Schema. Once **DPS X-Link** is installed, it allows an authorized client-application developer to view an ADABAS datasource as one large XML repository, presenting all database structures and metadata in XML Schema format and instantly making available any imaginable subset of the database's data presented in XML format (adhering to the database's XML Schema).

In the most common usage of **DPS X-Link**, a customer-written client application submits queries (either in XML format or in "SELECT" statement format) to **DPS X-Link**, and **DPS X-Link** returns the corresponding ADABAS data and metadata in XML format.

The Chief Components of DPS X-Link

As shown in the architectural overview below, queries may be submitted remotely from a workstation-based application or locally from a mainframe-based application. Queries can also be invoked and processed on the mainframe in batch mode.

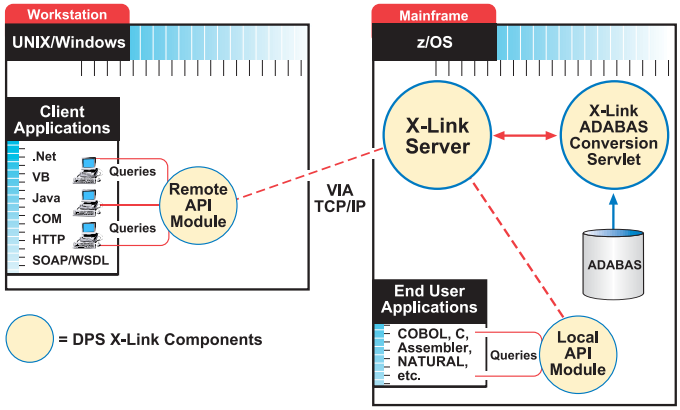

The **Server/Servlet** runs on the mainframe as a task/subtask:

- The **DPS X-Link** Server is a multitasking z/OS application.
- The **DPS X-Link** standard Servlets include ADABAS interface and ADABAS direct call parsers/builders, built-in XML parser, and registry processor.

The following is an outline of the **Server** Architecture:

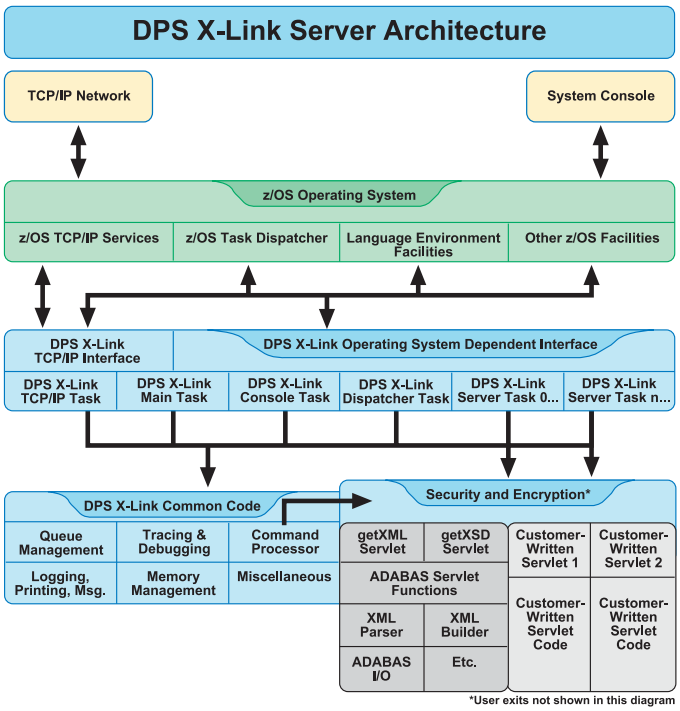

The Remote API Module is a Dynamic Link Library (DLL) module running on workstations. The following is an outline of the flow of **DPS X-Link** request/response:

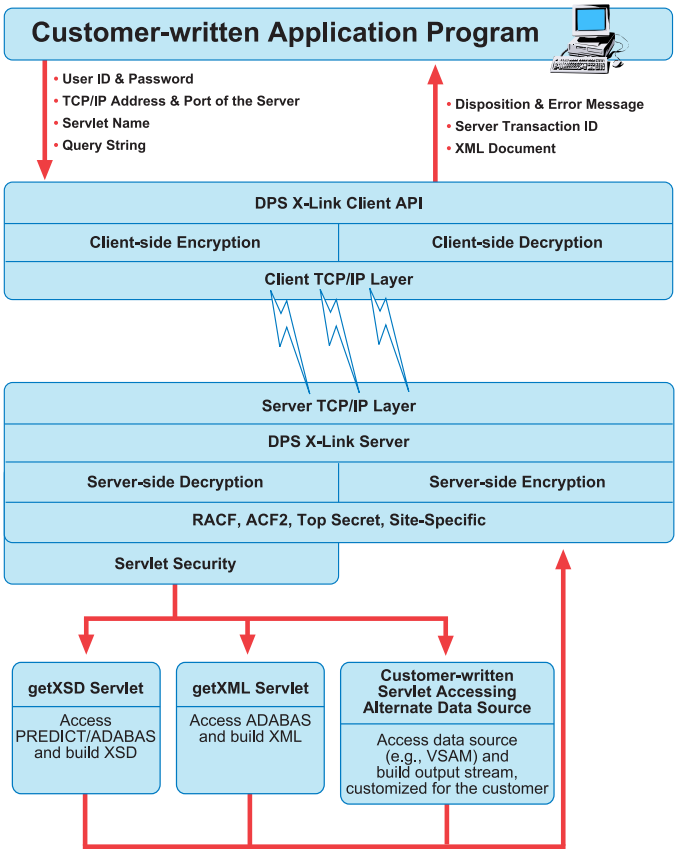

(continued on page 4)

"XMLize" Your Enterprise (continued from page 3)

The "roll-your-own" Alternative

To date, those sites wishing to convert their legacy data into workable XML formats have been forced to code their own solutions, with the typical home-grown solution being "hard-wired" to extract specific data from a specific source and convert it into a single type of XML document. Then, for each new legacy data source, a completely separate program or set of programs must be hard-coded. Ironically, those sites adopting this approach will soon (if they do not already) find themselves in the midst of a data/metadata code maintenance quagmire from which the XML revolution was originally engineered to free them.

ADABAS Data Conversions -- The Treehouse Advantage

One of **DPS X-Link**'s value points to the customer is that its developers have extensive knowledge of ADABAS/PREDICT, along with years of experience in implementing Treehouse's ADABAS-to-RDBMS data transfer solution (**tRelational/DPS**). **DPS X-Link** builds on that expertise to provide the complete ADABAS-to-XML solution.

Contact Treehouse for a free 30-day trial of **DPS X-Link**. ●

DPS X-Link Features Checklist

Feature	DPS X-Link?
Provides interactive access to ADABAS data from application programs?	Yes
Generates XML output from ADABAS queries?	Yes
Provides interactive access to PREDICT metadata from application programs?	Yes
Generates XML schemas based on ADABAS PREDICT metadata?	Yes
Provides access from PC-based and mainframe-based applications, locally or over the TCP/IP network and/or the Internet?	Yes
Automatically uses PREDICT names for element names in generated XML documents?	Yes
Accepts PREDICT names for queries?	Yes
Maintains the full integrity of the structure of the ADABAS data when producing XML, including coping with MUs, PEs, and group fields?	Yes
Provides user id and password security at the servlet level?	Yes
Provides security based on location (requestor's IP address or subnet)?	Yes
Provides combined user id/password and location security at the servlet level?	Yes
Offers the ability to have separate security for the PREDICT metadata and ADABAS data?	Yes
Supplies its own "quick" encryption?	Yes
Provides for user-implemented encryption via exits on both the PC and mainframe, allowing for centralized maintenance and enforcement of encryption methodologies?	Yes
Handles all the TCP/IP communications and error recovery for client application programs?	Yes
Has its own built-in TCP/IP server for the mainframe?	Yes
Is capable of network-enabling any mainframe service, such as access to specific VSAM files, through customer-written servlets? Vendor offers consulting services for development of these servlets?	Yes
Has the ability to "disable" individual servlets for a period of time for maintenance (i.e., reorgs) or other reasons?	Yes
Provides other ADABAS-related services, such as displaying field definition table information and PREDICT DDE metadata?	Yes
Offers a useful set of operator commands for monitoring and maintaining the server and all its security and other settings?	Yes
Enables operator commands over the network via a PC Windows utility or from application programs with full security based on user id/password and IP address/subnet?	Yes
Has a mainframe architecture that is truly multi-tasked, providing for up to 90 separate servlet subtasks, for delivery of high speed services?	Yes
Is delivered with example client applications and example customer-written servlets?	Yes
Requires complicated and expensive third party server or middleware?	No
Is easy to install and use?	Yes
Provides HTTP support?	Yes
Provides SOAP support?	Yes
Provides for updates to ADABAS?	Upcoming release
Provides client ADABAS resource consumption governors?	Upcoming release

Introducing the ADABAS-to-RDBMS Leader --Again

by Wayne Lashley

Treehouse has been the leader in ADABAS-to-RDBMS data transfer for many years. Now that we have demonstrated success, others want to get in on the action even after years of telling customers there is no need for products like ours!

ADABAS data replication is a tricky business. You have to study it, design for it, develop products to do it, practice it, and be committed to it. It can't be a little diversion that you dip your toe in and then abandon when you find out it's hard to do. We've spent years developing our **tRelational/DPS** and **DPSync** *products*, so you don't have to spend years and endless consulting dollars waiting for a vendor to develop a custom *"solution"*.

We hear vendors say that each customer's needs are different. That's not news to us—it's been that way since we first started developing **tRelational/DPS** in 1994. That's why we had to build products that are so comprehensive, so robust, so extensible, so productive, and so efficient. The result is that dozens of customers have built mission-critical systems with them.

Yet these same products can have you pumping data from ADABAS to your RDBMS only minutes after installation—with the products having analyzed your ADABAS file structure and content; designed the native RDBMS schema for you; generated the mapping relationships and transformations; generated the RDBMS Data Definition Language (DDL); executed the initial Extract-Transform-Load (ETL) to create natively-formatted data and utility control files; and commenced execution of the ongoing Change Data Capture (CDC) to keep you in sync, with **zero impact** on your operational ADABAS databases and applications. And when customers told us they needed the functionality of **tRelational/DPS**, but propagating data in near-real-time, we delivered that in our **DPSync** product.

"Each customer is different, so you can't build a product to meet all those requirements". ???

Any vendor that makes such a statement is evidently operating in (for them) unexplored and poorly-understood territory, and/or lacks commitment to the work required to deliver a product in a timely manner. Or perhaps such a vendor wants to have customers pay for consulting to build the same "solution" over and over again—and over yet again when the "solution" needs to be modified. To be sure, one would have to ask how such a vendor could hope to support its customers, each with a different "solution". More consulting, no doubt.

We all agree that the ADABAS product set has met the requirements of many different customers, so it follows that one ADABAS replication product set should also handle the different customers' needs.

And what happens when the vendor realizes this foray into ADABAS replication is no longer tenable? (Some vendors do have this "toe dipping diversion habit") Imagine, as a customer, the prospective nightmare of trying to undo work invested in such a "solution", writing off the acquisition and implementation costs, spending time and money in acquiring a replacement product (i.e., **DPSync**), and refitting existing applications in order to use the new product. Actually, many customers have already experienced "solution nightmares" before calling us. Don't be the next one to go the wrong route.

You can rest assured that TSI is committed to our products. Many ADABAS-to-RDBMS customer success stories can be viewed on the Treehouse Web site at www.treehouse.com/customercomments.html and in past issues of the Treehouse Newsletter. We support our products around the clock for all customers, worldwide, and **tRelational/DPS** (and now **DPSync** and **DPS X-Link)** are currently our flagship products.

We Want You to Succeed – Immediately

We want your project to be a success, and we want you to be up and running, transferring and propagating data as soon as possible. To that end, we encourage a "pilot project" before the product trial, which is typically a 3-to-5-day site visit in the lower 48 States (We often extend the engagement appropriately for travel farther afield). **If the client elects to purchase the products, the pilot project consulting fee is fully credited towards the purchase, resulting in net free consulting.**

Pilot projects have been well-received by our customers for several reasons:

1) A client serious about an ADABAS-to-RDBMS project will not only learn about the products but will also gain knowledge regarding the overall ADABAS-to-RDBMS process and their own data.
2) The pilot project provides a significant amount of hands-on training and results in a fast-track setup and evaluation.
3) We typically offer a 30-day trial following the pilot project, during which the client can accomplish an even more detailed evaluation.
4) At the conclusion of the pilot project, the client has successfully loaded (and propagated) selected ADABAS files into the RDBMS, exercising all pertinent features of the products.
5) The pilot project affords the opportunity to discuss project objectives and determine optimum configuration and usage of the products.

(continued on page 6)

Introducing the ADABAS-to-RDBMS Leader --Again *(continued from page 5)*

What Should I Ask When Looking at ADABAS-to-RDBMS ETL/CDC Tools? We have created a list of features that we feel a site should discuss with any vendor offering a solution for ADABAS data transfer, propagation, warehousing, etc. The following chart may prove helpful for your decision making.

	tRelational/DPS and DPSync vs. Other Replication Solutions Checklist
✓	**tRelational**'s analysis, modeling and mapping environment provides the data analyst productivity when migrating or replicating data between large, complex schemas.
✓	**tRelational** provides a centralized metadata repository that contains: • ADABAS metadata extracted from the ADABAS FDT and PREDICT (and the capability to reconcile differences) • A metadata model for the target RDBMS schema that can be: - automatically imported from an existing RDBMS schema or data modeling tool - automatically generated by **tRelational** based on source ADABAS schema, complete with automatic datatype selection and assignment of conversion algorithm, if necessary - created "by-hand" using the **tRelational** user interface - any combination of the above • Specifications for the mapping between the source (ADABAS) and target (RDBMS).
✓	**tRelational**'s analysis features provide the data analyst with knowledge of both the ADABAS schema and data, including: • Statistics to support the selection of RDBMS primary keys • Statistics that show how repeating elements are really used • Statistics to guide alphanumeric datatype selection in the RDBMS target (that are utilized by schema auto-generation through customizable rules).
✓	**tRelational** provides auto-generation facilities to create DDL for the target RDBMS physical schema
✓	**tRelational** provides both 3270 and GUI-based mapping facilities.
✓	**tRelational/DPS** can be used for ETL (initial RDBMS loading), staged CDC (batch change data capture), and near-real-time CDC (via **DPSync**).
✓	**tRelational/DPS** and **DPSync** provide extracted and transformed data natively formatted for the load utility or SQL processor of the target RDBMS. The RDBMS load utility's control file is also generated automatically. Flat files (uncompressed fixed-length or delimited) are supported as an output option.
✓	**tRelational/DPS** and **DPSync** provide strong capabilities for transforming repeating and positional elements into dependant child tables. Data may be transformed into normalized or de-normalized structures, or any combination thereof, as required by the application.
✓	**tRelational/DPS** and **DPSync** support implementation of very complex mappings not possible in other products. At one customer site, a single complex ADABAS file was mapped to more than 60 relational tables with multi-level data structures.
✓	**tRelational/DPS** provide powerful, built-in, extensible transformational capabilities.
✓	An individual ADABAS record may be changed many times during a particular processing period. **DPS** includes a feature called **APC** to reduce and manage the amount of SQL update activity necessary. **APC** *intelligently* uses the first 'before" image and the last "after" image to generate the SQL update.
✓	**tRelational/DPS** can be used to export ADABAS metadata information into a charting application or into a repository for the purposes of developing an enterprise data model.
✓	**tRelational/DPS** and **DPSync** support ADABAS release 5 and up.
✓	**tRelational/DPS** is a mature product set. The current release level is 4.1.x, and there are more than 50 installations. **tRelational** and **DPS** are in use in some of the largest, highest-volume ADABAS sites in the world. The **RRDF** component of **DPSync** is also in use in very large environments.
✓	With **DPSync** installed, clients are well positioned to implement disaster recovery and remote data vaulting solutions.
✓	**tRelational/DPS** and **DPSync** are program products, ready to use right out of the box. This is in contrast to other integration solutions that require coding to make them useful.
✓	**tRelational/DPS** are products maintained by Treehouse, not a custom "solution" maintained by the customer. Treehouse provides 24x7 support to all its customers worldwide.
✓	Neither EntireX nor MQSeries is required for a successful **DPSync** implementation, but either may be used as a data transport to impart desired features to a **DPSync** application.

Treehouse welcomes four new international affiliates: **DKT** of Hungary, **Norma Consulting** of Spain, **vTA International** of the Netherlands, and **VersaTec IT Services** of Germany. These companies will be marketing and supporting selected Treehouse products in their respective territories. Treehouse welcomes new affiliates and partners. For information on becoming a Treehouse affiliate or partner, contact **Greg Such**, Manager of Partner Relations at gsuch@treehouse.com.

Daten-Kontor Trade Kft., Hungary http://www.dkt.hu

Daten-Kontor Trade Kft. (DKT) was established in 1993 with the goal of providing comprehensive turn-key solutions for clients while maintaining the highest possible service levels. With the help of 28 professionals, DKT constantly strives to expand its range of expertise.

DKT is a Certified Microsoft Solution Provider whose activities include IT intellectual services (including software localization), software services, and hardware support. With beginnings in the distribution and teaching of Human Resource Management, DKT has recently expanded into the area of Time and Attendance. The latest direction is integration, which includes marketing the **iBahn** product from Treehouse.

Treehouse is pleased to partner with DKT in Hungary.

NORMA Consulting, Spain and Andorra http://www.normaconsulting.es

NORMA Consulting began working with ADABAS and NATURAL in 1986. Today, NORMA is a thriving IT and telecommunications consultancy with more than 200 consultants working in Barcelona, Madrid, and Andorra. NORMA is a member of the Altran Group, one of the largest consulting companies in Europe.

NORMA currently has more than 50 consultants working with clients developing NATURAL applications and supporting ADABAS environments. In addition, NORMA has been an SAP reseller and implementation partner in Spain since 1998, with 30 consultants focusing on specific modules and IT environments.

We are proud to have NORMA representing Treehouse products in Spain and Andorra and working as a development partner for the Treehouse **iBahn** product.

VersaTec IT Services, Germany http://www.versatec.de

VersaTec IT Services was established in 2003 by **Viktor Hubenow** to offer development and data center processing services on mainframe and open system platforms. Many of the VersaTec specialists are former employees of Software AG and have heavy experience in developing, training, supporting, and providing services for ADABAS and NATURAL environments. VersaTec is pleased to represent Treehouse products, including **tRelational** and **DPS** as their preferred integration product set when there is a need for ADABAS data to be replicated or migrated to relational formats.

VersaTec consultants are well versed in new technologies like XML, Java, SOAP, and data warehousing. They also have expertise in the systems side of SAP R/3; working with interfaces, process optimization and implementation of the SAP Enterprise Portal. VersaTec has found these competencies to be very well received, as many SAG mainframe users are SAP users too.

Treehouse welcomes this partnership with VersaTec in Germany.

vTA International, The Netherlands http://www.vta-international.com

vTA International (van Toor Automatisering) was founded in 1996 by General Manager **Leen van Toor**. Today vTA is very well known in the international information systems community and has gained an excellent reputation in systems management, the migration of information systems, and ADABAS/NATURAL development & support. vTA now represents Treehouse Software products in the Benelux countries.

vTA is constantly striving to improve an already-high standard of quality, service and performance. vTA works closely with customers to solve problems and satisfy needs in an efficient, cost-effective and practical manner. vTA's approach, combined with their ADABAS/NATURAL experience and Treehouse products, ensure that the client always obtains the best results.

Treehouse is pleased to partner with vTA in the Benelux countries.

Treehouse Software Products

ADABAS-to-RDBMS Data Transfer:

DPS - ADABAS-to-RDBMS data materialization (ETL), replication, and propagation (CDC) software

DPS X-LINK - Instant XML-based access to ADABAS

DPSync - Near-real-time ADABAS-to-RDBMS data propagation (CDC) software product set

tRelational - ADABAS modeling, mapping, and data analysis tool; **DPS** parameter generator

tRelationalPC - Windows-based graphical interface to make the tasks of modeling and mapping even simpler

Treehouse Remote Access (TRA) - Middleware that allows **tRelationalPC** to communicate with **tRelational** on the mainframe.

Data Integration:

iBahn - Integration suite that connects data within the enterprise or between business partners

UNIX:

SEDIT - XEDIT and ISPF/PDF compatible editor for UNIX and Windows

S/REXX - REXX-compatible language for UNIX and Windows

S/REXX Debugger - Optional graphical debugger for **S/REXX** programs

Software AG Related:

ADAREORG - File reorganization tool for ADABAS

ADASTRIP - Data extraction utility for ADABAS

AUDITRE - Generalized ADABAS auditing facility

AUTOLOADER - ADABAS file automatic unload/reload/dump utility

CHART for NATURAL - NATURAL application analysis and documentation tool

N2O - NATURAL application change management system

N2O/3GL - 3GL support within **N2O** for PANVALET, LIBRARIAN, ENDEVOR, and PDSs

PROFILER for NATURAL - NATURAL quality assurance and testing tool

SECURITRE - ADABAS and NATURAL security interface to RACF, ACF2, and TOP SECRET

TRIM - ADABAS and NATURAL performance monitor

Phone: (412) 741•1677 **Fax:** (412) 741•7245 **E-mail:** tsi@treehouse.com **Web:** http://www.treehouse.com

TREEHOUSE SOFTWARE, INC.
409 Broad Street, Suite 140
Sewickley, PA 15143 USA